NOTES :
1. ALL DIMENSIONS ARE IN FOOT-INCHES.
2. ALL BOLT HOLES TO STRADDLE BOTH NATURAL CENTER LINES.
3. UNIT TO BE MOUNTED IN VERTICAL POSITION.
4. ALL SHARP CORNERS SHALL BE ROUNDED OFF WITH SMOOTH RADIUS UNLESS SPECIFIED OTHERWISE.
5. ALL PRESSURE BEARING PLATES SHALL BE SUPPLIED IN NORMALIZED CONDITION.
6. TOLERENCE ON PLATE THICKNESS SHALL BE ON POSITIVE SIDE ONLY.
7. NO NON DESTRUCTIVE EXAMINATION.
8. ALL WELDING EDGES SHALL BE CHECKED FOR CRACKS, LAMINATION OR SEGREGATIONS.
9. NO NON DESTRUCTIVE EXAMINATION.

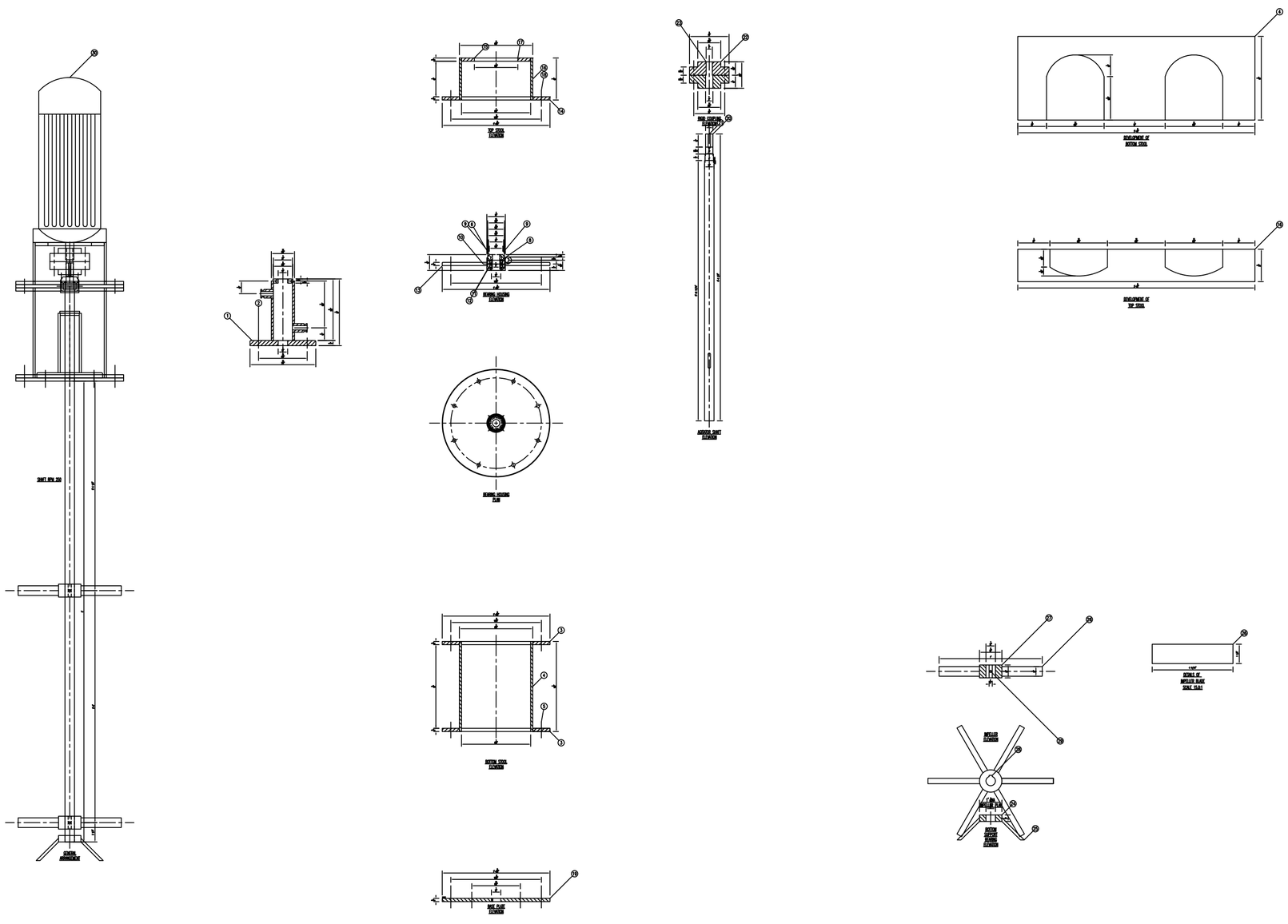

				Total Weight	125.51
30	Vertical Geared Motor, 7.5 HP, 1500 RPM Ratio 5:1	1	STD	7 3/16"(OD) 1'-4" (Lg)	–
29	Grub Screw	2	Stainless Steel	1/4"(Dia) 3/4"(Lg)	0.02
28	Impeller Key	2	Stainless Steel	5/8"(Wid) 1/4"(Th) 1 1/2" (Lg)	0.02
27	Impeller Hub	2	Stainless Steel	2 5/8"(OD) 1 7/8"(ID) 1 1/2"(Th)	3.85
26	Agitator Blades	12	Stainless Steel	1 1/8"(Wid) 5/8"(Th) 4 11/16" (Lg)	2.92
25	Support Plates	3	Stainless Steel	Length to suit 1 1/8" (Wid) 5/8"(Th)	–
24	Bottom Support Hub	1	Stainless Steel	2 5/8"(OD) 1 7/8"(ID) 1 1/2"(Th)	1.92
23	Rigid Coupling Key	1	Stainless Steel	1/4"(Wid) 1/4"(Th) 1 9/16" (Lg)	0.01
22	Rigid Coupling	1	STD	4 5/8"(OD) 3/4"(ID) 3 1/16"(Th)	10.76
21	Agitator Shaft Key	1	Stainless Steel	1/4"(Wid) 1/4"(Th) 1 1/2" (Lg)	0.01
20	Agitator Shaft	1	Stainless Steel	1 7/8"(Dia) 6'-1 3/4"(Lg)	20.60
19	Base Plate	1	Stainless Steel	1'-0 9/16"(OD) 1 7/8"(ID) 3/8"(Th)	13.52
18	Top Stool Lower Stud Bolts / Nuts	8	STD Cladded	1/2"(Dia) 1 1/2"(Lg)	0.64
17	Top Stool Lower Stud Bolts / Nuts	4	STD Cladded	1/2"(Dia) 7/8"(Lg)	0.40
16	Top Stool Shell	1	Stainless Steel	8 9/16"(OD) 8 7/16"(ID) 4 7/8"(Lg)	9.37
15	Top Stool Top Plate	1	Stainless Steel	8 7/16"(OD) 5 7/16"(ID) 3/8"(Th)	3.38
14	Top Stool Flange	1	Stainless Steel	1'-0 9/16"(OD) 8 9/16"(ID) 3/8"(Th)	7.31
13	Support Ring	1	Stainless Steel	1'-0 9/16"(OD) 2 7/8"(ID) 3/8"(Th)	13.22
12	Bearing Casing	1	Stainless Steel	2 7/8"(OD) 1 7/8"(ID) 1 3/16"(Th)	0.41
11	Bearing O ring	1	RUBBER	1 7/8"(OD) 1 7/8"(ID) 3/16"(Th)	0.01
10	Bearing	1	STD	1 1/2"(OD) 1"(ID) 3/4"(Th)	0.23
9	Cover Stud Bolts / Nuts	4	STD Cladded	1/4"(Dia) 7/8"(Lg)	0.10
8	Spring Washer	1	STD Cladded	1 1/4"(OD) 7/8"(ID) 1/16"(Th)	0.01
7	Lock Nut	1	STD Cladded	1 1/8"(OD) 7/8"(ID) 1/4"(Th)	0.01
6	Bearing Cover	1	Stainless Steel	2 1/8"(OD) 7/8"(ID) 3/4"(Th)	0.65
5	Bottom Stool Lower Stud Bolts / Nuts	8	STD Cladded	1/2"(Dia) 1 1/8"(Lg)	0.45
4	Bottom Stool Shell	1	Stainless Steel	8 9/16"(OD) 8 7/16"(ID) 10 1/2"(Lg)	20.08
3	Bottom Stool Flanges	2	Stainless Steel	1'-0 9/16"(OD) 8 9/16"(ID) 3/8"(Th)	14.61
2	Base Stud Bolts / Nuts	4	STD Cladded	5/8"(Dia) 1 3/16"(Lg)	0.56
1	Mechanical Seal Assembly	1	Stainless Steel	7 11/16"(OD) 2 1/4"(ID) 7 1/2"(Lg)	–
No	Description	Qty	Material	Size	Wt lbs

Alt No.	Suffix	Description	Chgd.	Chkd.	Appd.	Date

Matl. CARBON STEEL | Qty. 1 | Part No.

Designation : AGITATOR

Clients: NELCON ENGINEERS

	Name	Date
DRN BY	SP	07-07-25
CHKD BY	RS	07-07-25
APPD BY	DP	07-07-25

Scale : 1:7.5

File Size : A1

Drg. No. agit05e