NOTES :
1. ALL DIMENSIONS ARE IN MM.
2. ALL BOLT HOLES TO STRADDLE BOTH NATURAL CENTER LINES.
3. UNIT TO BE MOUNTED IN VERTICAL POSITION.
4. ALL SHARP CORNERS SHALL BE ROUNDED OFF WITH SMOOTH RADIUS UNLESS SPECIFIED OTHERWISE.
5. ALL PRESSURE BEARING PLATES SHALL BE SUPPLIED IN NORMALIZED CONDITION.
6. TOLERENCE ON PLATE THICKNESS SHALL BE ON POSITIVE SIDE ONLY.
7. NO NON DESTRUCTIVE EXAMINATION.
8. ALL WELDING EDGES SHALL BE CHECKED FOR CRACKS, LAMINATION OR SEGREGATIONS.
9. NO NON DESTRUCTIVE EXAMINATION.

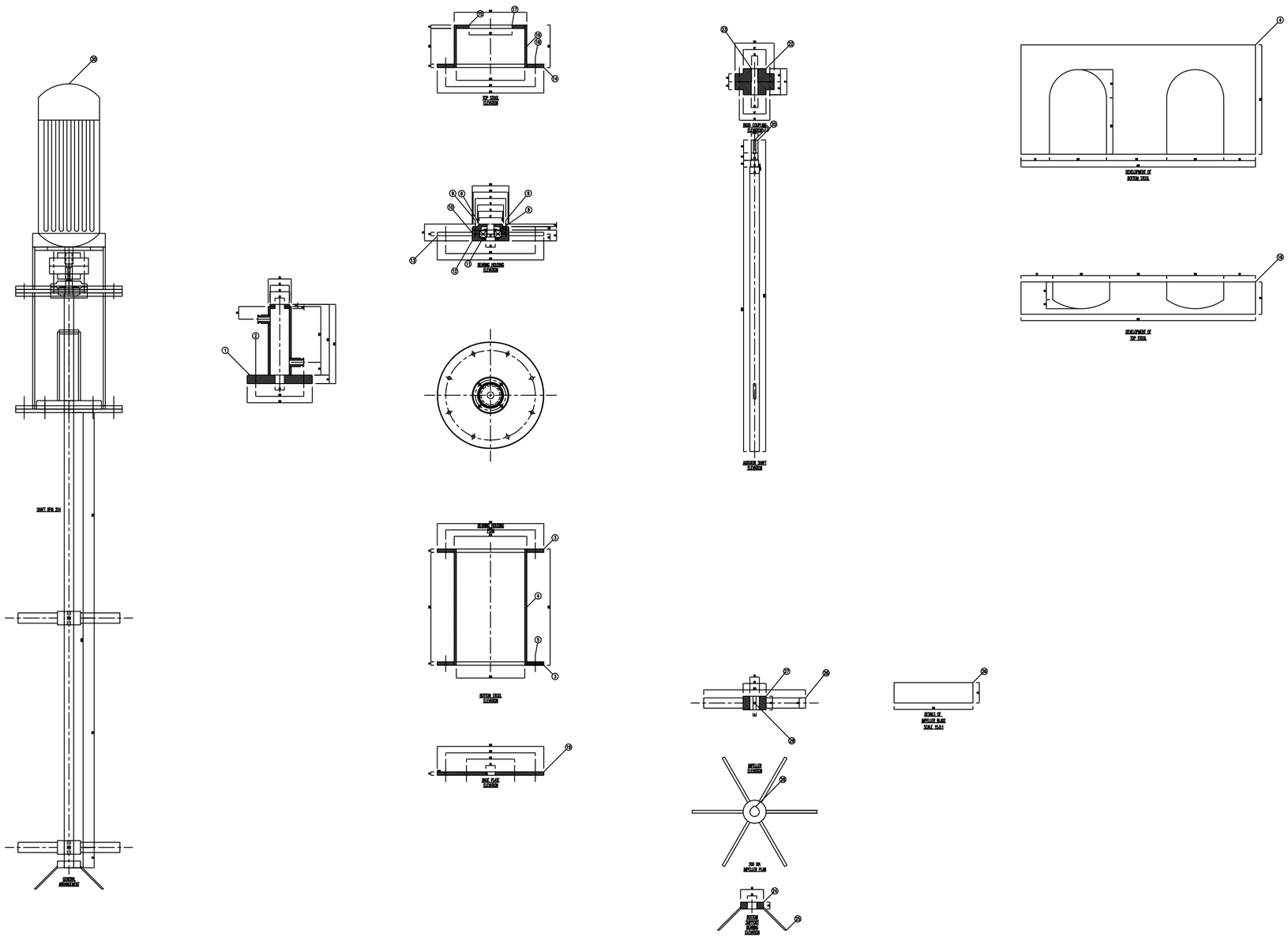

No	Description	Qty	Material	Size	Wt Kgs
				Total Weight	61.44
30	Vertical Geared Motor, 7.5 HP, 1500 RPM Rotib 3.1	1	STD	180(OD) 400 (Lg)	–
29	Grub Screw	2	Stainless Steel	6(dia) 20(Lg)	0.01
28	Impeller Key	2	Stainless Steel	8(Wd) 7(Th) 40 (Lg)	0.03
27	Impeller Hub	2	Stainless Steel	68(OD) 28(ID) 60(Th)	1.96
26	Agitator Blades	12	Stainless Steel	30(Wd) 8(Th) 116 (Lg)	0.68
25	Support Plates	3	Stainless Steel	Length to suit 30 (Wd) 8(Th)	–
24	Bottom Support Hub	1	Stainless Steel	68(OD) 28(ID) 40(Th)	0.98
23	Rigid Coupling Key	1	Stainless Steel	7(Wd) 7(Th) 39 (Lg)	0.00
22	Rigid Coupling	1	STD	115(OD) 18(ID) 77(Th)	3.66
21	Agitator Shaft Key	1	Stainless Steel	7(Wd) 7(Th) 36 (Lg)	0.00
20	Agitator Shaft	1	Stainless Steel	28(dia) 1927(Lg)	9.57
19	Base Plate	1	Stainless Steel	314(OD) 28(ID) 10(Th)	6.25
18	Top Stool Lower Stud Bolts / Nuts	8	STD Cladded	12(dia) 40(Lg)	0.29
17	Top Stool Lower Stud Bolts / Nuts	4	STD Cladded	12(dia) 50(Lg)	0.18
16	Top Stool Shell	1	Stainless Steel	214(OD) 202(ID) 125(Lg)	3.93
15	Top Stool Top Plate	1	Stainless Steel	202(OD) 122(ID) 10(Th)	1.56
14	Top Stool Flange	1	Stainless Steel	314(OD) 214(ID) 10(Th)	3.38
13	Support Ring	1	Stainless Steel	314(OD) 108(ID) 10(Th)	5.56
12	Bearing Casing	1	Stainless Steel	108(OD) 28(ID) 30(Th)	2.22
11	Bearing O ring	1	RUBBER	48(OD) 28(ID) 5(Th)	0.01
10	Bearing	1	STD	64(OD) 24(ID) 20(Ht)	0.45
9	Cover Stud Bolts / Nuts	4	STD Cladded	6(dia) 48(Lg)	0.04
8	Spring Washer	1	STD Cladded	50(OD) 20(ID) 2(Th)	0.03
7	Lock Nut	1	STD Cladded	40(OD) 20(ID) 5(Th)	0.02
6	Bearing Cover	1	Stainless Steel	108(OD) 20(ID) 20(Th)	1.40
5	Bottom Stool Lower Stud Bolts / Nuts	8	STD Cladded	12(dia) 50(Lg)	0.22
4	Bottom Stool Shell	1	Stainless Steel	214(OD) 202(ID) 342(Lg)	10.92
3	Bottom Stool Flanges	2	Stainless Steel	314(OD) 214(ID) 10(Th)	6.25
2	Base Stud Bolts / Nuts	4	STD Cladded	16(dia) 50(Lg)	0.35
1	Mechanical Seal Assembly	1	Stainless Steel	192(OD) 56(ID) 227(Lg)	–

Alt No.	Suffix	Description	Chgd.	Chkd.	Appd.	Date

Matl. CARBON STEEL | Qty. 1 | Part No.

Designation : AGITATOR

Clients: NELCON ENGINEERS

	Name	Date
DRN BY	SP	07-07-25
CHKD BY	RS	07-07-25
APPD BY	DP	07-07-25

Scale : 1:7.5

File Size : A1

Drg. No. agit05m