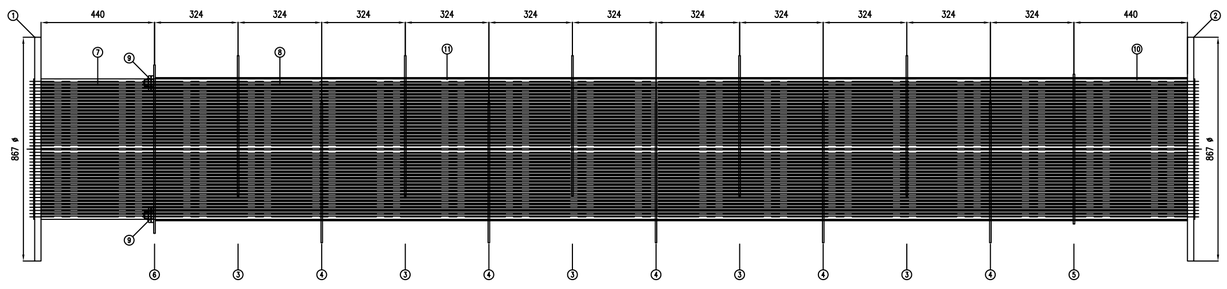

ELEVATION
SCALE 1: 12.50

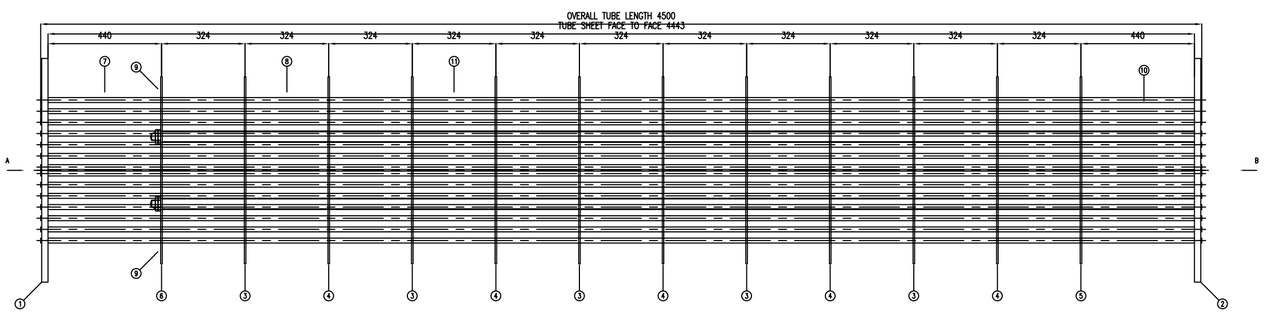

PLAN
SCALE 1: 12.50
DETAILS OF TUBE BUNDLE

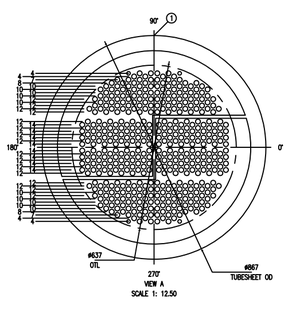

VIEW A
SCALE 1: 12.50

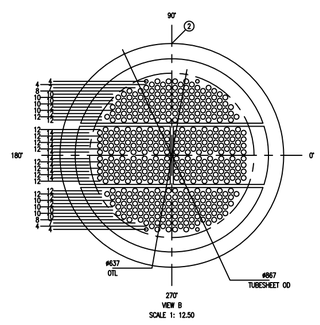

VIEW B
SCALE 1: 12.50

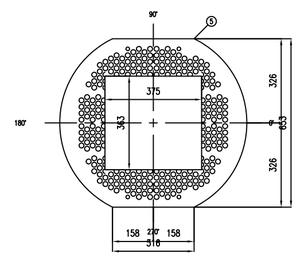

TOP/BOTTOM/MIDDLE CUT BAFFLE
SCALE 1: 12.50

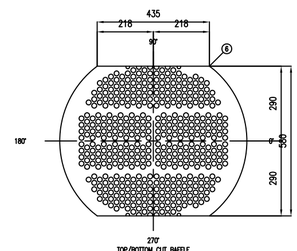

TOP/BOTTOM CUT BAFFLE
SCALE 1: 12.50

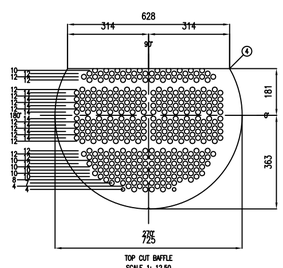

TOP CUT BAFFLE
SCALE 1: 12.50

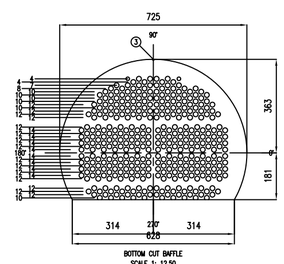

BOTTOM CUT BAFFLE
SCALE 1: 12.50

REV	DATE	DESCRIPTION	DRN	CHKD	APPD
0	02-07-2025		GSD	AKK	HVR

REVISION LIST

COMPANY NAME
CITY

DRN	GSD
DATE	02-07-2025
CHKD	AKK
DATE	02-07-2025
APPD	HVR
DATE	02-07-2025
SCALE	1:12.5
SHEET	A

Clients: ABC ENGINEERS
Consultants: ABC CONSULTANTS
End User: ABC ENGINEERS

Title :
TUBE BUNDLE / BAFFLE DETAILS

THIS DRAWING IS THE PROPERTY OF Co Name, ALL USE WITHOUT WRITTEN CONSENT IS FOREBIDDEN.

DWG. No.: he08m_aR0 | SHEET 1 OF 3 | REV. No. 0
PROJECT No.: PROJECT 123 | EQPT No.: EQUPT 123
TAG No.: HE-123
Company JOB No.: XYZ 001
CLIENT'S PO No:

CAD File: he08m_aR0

SIZE (594 mm X 841 mm)

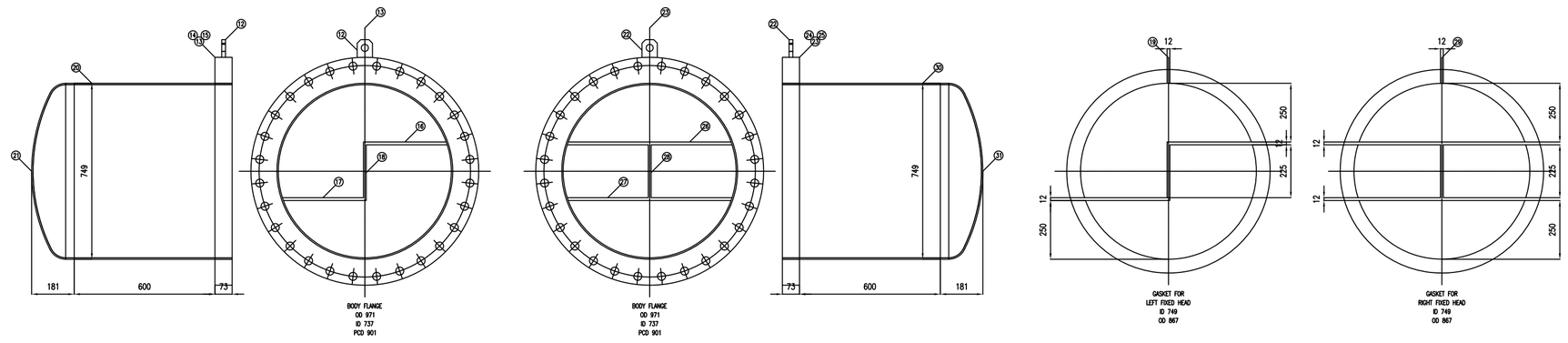

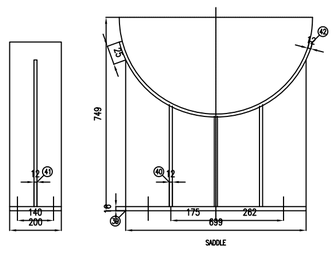

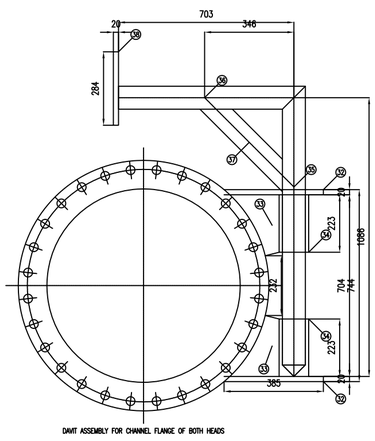

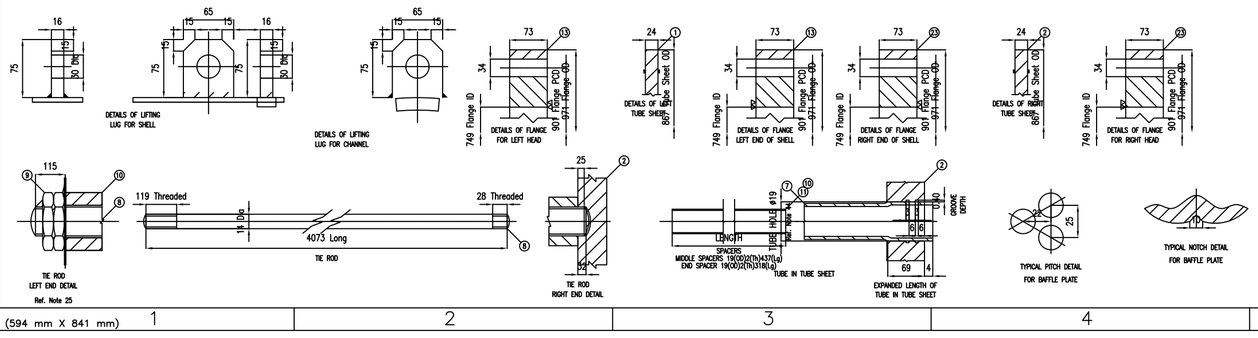

NOTES :
1. ALL DIMENSIONS ARE IN MM.
2. ALL BOLT HOLES TO STRADDLE BOTH NATURAL CENTER LINES.
3. FOR TOLRENCES REFER SHEEL & TUBE EXCHANGER STD-7-15-0019 REV-3.
4. HYDRO TEST SHALL BE DONE IN HORIZONTAL POSITION.
5. UNIT TO BE MOUNTED IN HORIZONTAL POSITION.
6. INDICATED THICKNESSES ARE MINIMUM AFTER CONSTRUCTION.
7. FLANGES UPTO 600 mm NB SHALL CONFIRM TO ASME B16.5.
8. FLANGES ABOVE 600 mm NB SHALL CONFIRM TO ASME B16.47.
9. ALL NOZZLES 50 mm NB AND BELOW SHALL BE PROVIDED WITH STIFFNER.
10. STIFFNER SIZE 30 mm X 6 mm AT RIGHT ANGLES.
11. AFTER HYDROTEST, EQUIPMENT SHALL BE COMPLETELY DRIED OUT WITH HOT AIR.
12. BLIND FLANGES SHALL BE PROVIDED WHERE MENTIONED.
13. OTHER FLANGES SHALL BE COVERED WITH STEEL COVERS.
14. FINISH OF GASKET SEATING FACE OF NOZZLE FLANGES SHALL BE 125-150 AARH FOR SPIRAL WOUND GASKETS.
15. ALL SHARP CORNERS SHALL BE ROUNDED OFF WITH SMOOTH RADIUS UNLESS SPECIFIED OTHERWISE.
16. ALL PRESSURE BEARING PLATES SHALL BE SUPPLIED IN NORMALIZED CONDITION.
17. THESE PLATES SHALL CONFIRM TO SA-20.
18. TOLERENCE ON PLATE THICKNESS SHALL BE ON POSITIVE SIDE ONLY.
19. FINAL ROLLING OF THE PLATES SHALL BE LENGTHWISE.
20. ALL FLANGES SHALL BE 100% UT EXAMINED IN ACCORDANCE WITH SA388, SEC 6 & 8, BEFORE ANY DRILLING OPERATION.
21. ALL WELDS SHALL BE PENETRATION WELDS, AFTER BACK CHIPPED TO SOUND METAL.
22. IT SHALL BE REWELDED FROM OTHER SIDE, UNLESS OTHERWISE SHOWN.
23. THOSE JOINTS THAT ARE NOT ACCESIBLE FOR BACK CHIPPING, ROOT RUN SHALL BE CARRIED OUT WITH GTAW PROCESS.
24. NON DESTRUCTIVE EXAMINATION :
  24.a. ALL BUTT WELD EDGES SHALL BE UT EXAMINED FOR A DISTANCE OF 2 TIMES MATERIAL THICKNESS.
  24.b. KNUCKLE REGION AND STRAIGHT FACE OF DISHED HEADS SHALL BE 100% PT EXAMINED, AFTER FORMING.
  24.c. 100% EXAMINATION OF DISHED HEADS SHALL BE DONE AFTER HEAT TREATMENT.
  24.d. ALL NOZZLE WELDS SHALL BE DP EXAMINED AFTER ROOT RUN AND FINAL PASS.
  24.e. EXTERNAL SURFACES OF WELDS WITH THICKNESS MORE THAN 50 mm NB SHALL BE DP/MT EXAMINATION AFTER HYDROTEST.
  24.f. ALL WELDING EDGES SHALL BE CHECKED FOR CRACKS, LAMINATION OR SEGREGATIONS.
  24.g. MP/DP TEST SHALL BE CARRIED OUT ON INSIDE/OUTSIDE SURFACES OF DISHED HEADS.
  24.h. MACHINED SURFACES OF ALL FORGINGS SHALL BE EXAMINED FOR SURFACE DEFECTS BY MP/DP TEST.
  24.i. METHODS FOR FASTENING NUTS TO TIE RODS :
25. METHODS FOR FASTENING NUTS TO TIE RODS :
  25.a. WELD SECOND NUT TO TIE ROD.
  25.b. WELD BOTH NUTS.
  25.c. ALL WELDS TO EXTEND THE LENGTH OF ONE FLAT OF LENGTH.
  25.d. TOLERANCE FOR ALL NOZZLES ON TRUE VERTICAL LINE FROM ACTUAL NOZZLE CENTER LINE IS +/-3 mm.
26. TOLERANCE FOR ALL NOZZLES ON TRUE VERTICAL LINE FROM ACTUAL NOZZLE CENTER LINE IS +/-3 mm.
27. HEAT EXCHANGER SHALL BE HYDRO TESTED WITH CLEAN POTABLE WATER, SEA WATER SHALL NOT BE USED.
28. AFTER HYDROTEST, EQUIPMENT SHALL BE DRAINED AND DRIED WITH DRY AIR.
29. EQUIPMENT SHALL BE PERFECTLY CLEANED, AND FREED FROM ALL FOREIGN MATERIAL.
30. ALL NOZZLES SHALL BE COVERED WITH TEMPORARY CLOSURES, TO AVOID DAMAGE IN TRANSPORT.
31. PAINTING :
  31.a. ALL EXTERNAL UNMACHINED CS SURFACES SHALL BE PAINTED WITH ONE COAT OF INORGANIC ZINC SILICATE.
  31.b. PRIMER DF-75 MICRON DFT SHALL BE APPLIED AFTER SHOT BLASTING THE SURFACE TO SA 2 1/2 FINISH.
  31.c. EARTHING LUGS SHALL NOT BE PAINTED OR GALVANIZED.
  31.d. CLIENT'S NAME, ADDRESS, EQPT NO., P.O.NO. SHALL BE PAINTED ON SHELL WITH WHITE PAINT.
  31.e. ALL FLANGE FACES AND OTHER MACHINED SURFACES SHALL BE GREASED AND PROTECTED FROM RUST.
  31.f. BOLT THREADS SHALL BE LUBRICATED.
32. GASKETS :
  32.a. SERVICE GASKETS SHALL NOT BE USED FOR HYDROTEST.
  32.b. GASKET MATERIAL FOR HYDROTEST SHALL BE SAME AS SERVICE GASKET.
  32.c. EQUIPMENT SHALL BE SHIPPED IN AS HYDROTESTED CONDITION, WITHOUT REMOVING GASKETS USED FOR HYDROTEST.
  32.d. SERVICE GASKETS SHALL BE SENT LOOSE, AND ASSEMBLED AT SITE BY OTHERS.
  32.e. GASKET MATERIAL FOR NOZZLE FLANGES SHALL BE SS 316 SPIRAL WOUND WITH GRAFIL FILLER AND CS OUTER RING.
  32.f. GASKETS SHALL BE IN ACCORDANCE WITH ASME 16.29.
  32.g. THE m AND y VALUES OF SPIRAL WOUND GASKET SHALL BE GUARANTEED AS PER ASME SEC VIII, DIV I.
  32.h. GASKET CERTIFICATES SHALL INDICATE THE SAME AND SHALL BE PART OF FINAL DOCUMENTATION.
  32.i. VENT NOZZLES TO BE KEPT OPEN DURING FILLING OF WATER FOR HYDROTEST AND DURING DRAINING.
  32.j. DISH TOLERANCES SPECIFIED ARE MINIMUM AFTER FORMING.
  32.k. LIFTING LUGS ARE DESIGNED FOR LIFTING IN EMPTY CONDITION.
  32.l. HARDNESS OF METAL IN GASKET SHALL BE MINIMUM 15 BHN LOWER THAN FLANGE GASKET SEATING SURFACE METAL.
  32.m. HARDNESS IN NO CASE SHALL EXCEED 160 BHN.
  32.n. FILLER IN METAL JACKETED GASKETS SHALL NOT BE OF COMPRESSED TYPE.
  32.o. ALL GASKETS SHALL BE MADE IN ONE CONTINUOUS PIECE ALL AROUND.
  32.p. PASS PARTITION RIBS MUST BE CUT FROM SAME SHEET.
  32.q. FLAT JACKETED FACE OF THE GASKET SHALL BE ON PASS PARTITION PLATE SIDE.
  32.r. GASKET FOR GIRTH FLANGES SHALL BE METAL JACKETED ARAMIDE FIBER.
33. ALL RF PADS SHALL BE PROVIDED 2 NOS. OF 3 mm. NPT TELL TALE HOLES FOR AIR/SOAP SOLUTION TEST.
34. HOLES TO BE PLUGGED WITH HARD GREASE AFTER TESTING.
35. APPROPRIATE CODES FOR PIPES AND FITTINGS :
36. ASME B16.9M FOR FACTORY MADE WROUGHT BUTT WELD FITTINGS.
37. ASME B16.11 FOR FORGED FITTINGS, SOCKET WELDING AND THREADED JOINTS.
38. HEAT TREATMENT CYCLE FOR DISHED END :
  38.a. LOADING TEMPERATURE : 300 DEG C
  38.b. RATE OF HEATING : 56 TO 222 DEG C PER HOUR
  38.c. SOAKING TEMPERATURE : 610 +/- 10 DEG C
  38.d. SOAKING TIME : 30 TO 50 MINUTES.
  38.e. RATE OF COOLING (UPTO 300 DEG C) : 56 TO 278 DEG C PER HOUR.
  38.f. MEDIUM OF COOLING (<300 DEG C) : AIR
39. NAME PLATE SHALL BE TACK WELDED TO BRACKET ON ALL FOUR SIDES IN ADDITION TO RIVETS.
40. SEALING STRIPS SHALL BE CONTINUOUS.
41. BROKEN EDGES OF BAFFLE PLATES, SHALL BE WELDED BACK AFTER WELDING SEALING STRIPS.
42. TOP PORTION OF BAFFLE TO BE CUT TO ACCOMODATE IMPINGEMENT PLATE.
43. TUBE HOLE EDGES IN TUBE SHEET AND BAFFLES SHALL BE CHAMPHERED TO 1X45 DEG ON BOTH SIDES.
44. FOLLOWING PARTS SHALL BE SUPPLIED AS SPARES :
  44.a. 400% GASKETS FOR GIRTH JOINTS AND NOZZLES WITH BLIND FLANGES.
  45.a. 20% (MINIMUM 4 SETS) OF STUDS AND NUTS FOR GIRTH JOINTS AND NOZZLES WITH BLIND FLANGES.
46. BOTTOM SEALING STRIP SHALL BE CONTINUOUS, AND SHALL EXTEND BETWEEN END BAFFLES.
47. FOR BILL OF MATERIAL REFER SHEET 3 OF 3.
48. STEAMING OUT SHALL BE REQUIRED ON SHELL/TUBE SIDE AT 5 KG/SQ CM AND AT 170 DEG C.
49. SLIDING END SHALL BE PAINTED WITH " CAUTION : SLIDING END".
50. ALL TUBES SHALL BE COLD DRAWN, SEAMLESS, SINGLE PIECE AND IN ANNEALED CONDITION.
51. ALL TUBE HOLES SHALL HAVE CLOSE FIT AS PER TEMA.
52.

REV	DATE	DESCRIPTION	DRN	CHKD	APPD
0	02-07-2025		GSD	AKK	HVR

REVISION LIST

COMPANY NAME
CITY

DRN	GSD
DATE	02-07-2025
CHKD	AKK
DATE	02-07-2025
APPD	HVR
DATE	02-07-2025
SCALE	1:12.5
SHEET	B

Clients: ABC ENGINEERS
Consultants: ABC CONSULTANTS
End User: ABC ENGINEERS
Title :
PART DETAILS

THIS DRAWING IS THE PROPERTY OF Co Name. ALL USE WITHOUT WRITTEN CONSENT IS FOREBIDDEN.

DWG. No.: he08m_bR0 | SHEET 2 OF 3 | REV. No. 0
PROJECT No.: PROJECT 123 | EQPT No.: EQUPT 123
TAG No.: HE-123
Company JOB No.: XYZ 001
CLIENT'S PO No:

SIZE (594 mm X 841 mm)

CAD File:he08m_bR0

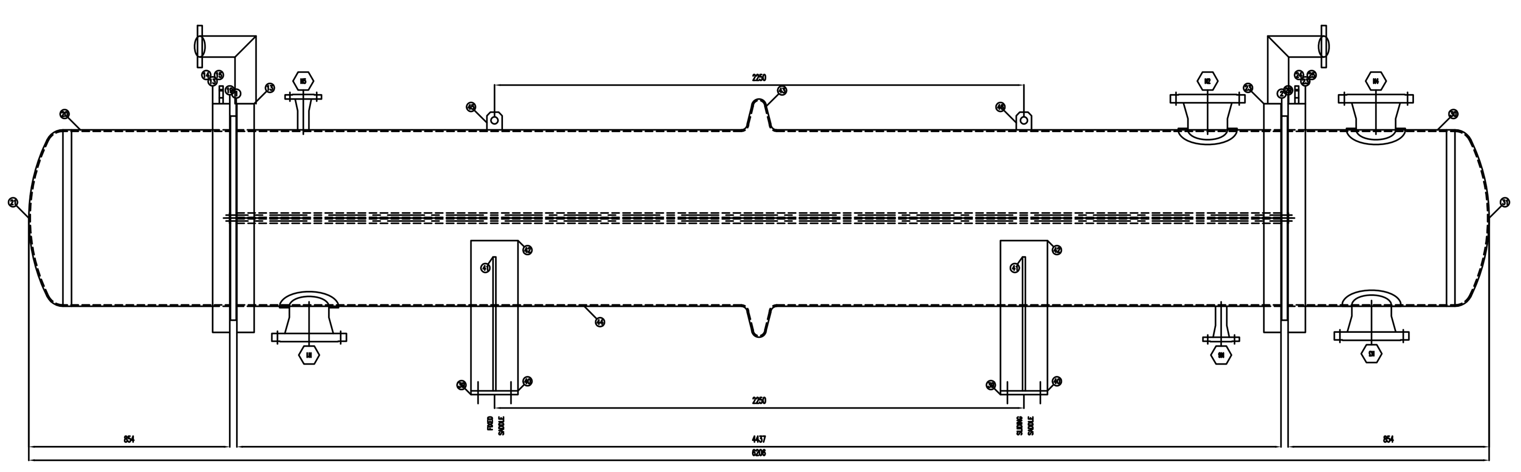

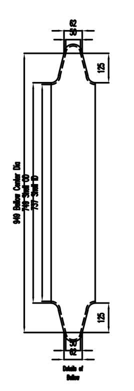

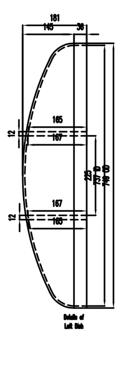

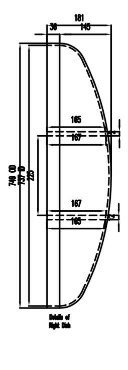

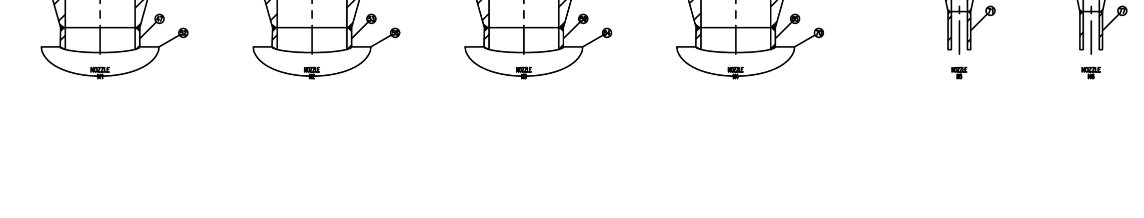

==

*Drawing Data
1. Clients Name :ABC ENGINEERS
2. Consultant :ABC CONSULTANTS
3. Drawn by :GSD
4. Checked by :AKK
5. Approved by :HVR
6. Date :02-07-2025
7. Drawing Number :G: he08m
8. Drawing Path :G:
9. Project No :PROJECT 123
10. Equipment No :EQUPT 123
11. Tag No :HE-123
12. Company Job No :XYZ 001
13. End User :ABC ENGINEERS
14. Revision No :0
15. System of Drawing Units : Metric

==

*Tube Data
1. Tube Diameter :19
2. Number of Tubes :450
3. Length of Tube :4500
4. Tube Thickness BWG :16
5. Tube Thickness :2
6. Distance of Tube Pitch :25
7. Number of passes :41
8. Tube extension : :4
9. Type of Pitch :Triangular
Gasket Width for Fixed Tube Sheet :12
Gasket Width for Floating Tube Sheet :12

==

*Fixed Tube Sheet Data
1. Tube Sheet Type :Without Flange
2. Outer Tube Limit :637
3. PCD of Tube Sheet Flanges :901
4. OD of Left Tube Sheet :867
5. Thickness of Left Tube Sheet :24
6. OD of Right Tube Sheet :867
7. Thickness of Right Tube Sheet :24

==

*Flanges Data
1. Head Type : Fixed Head
2. OD of Fixed Flange :971
3. PCD of Fixed Flange :901
4. Type of Left Flange : Slip On
5. Number of Bolt Holes :28
6. Diameter of bolt holes :34
7. Length of Stud Bolts :279
8. Diameter of stud bolts :31
9. Type of Right Flange : Slip On

==

*Shell Data
1. Main Shell OD :749
2. Main Shell Thickness :6
3. Gap in Baffle OD & Shell ID :50
4. Right Channel OD :749
5. Right Channel Thickness :6
6. Length of Right Channel :600
7. Left Channel OD :749
8. Left Channel Thickness :6
9. Length of Left Channel :600

==

*Baffle Data
1. Total Number of Baffles :12
2. Gap of End Baffles :440
3. OD of Baffles :725

----

*Top cut Baffle Data
1. Number of Baffles :5
2. Baffle Size % of Diameter :75.00
3. Thickness of Baffles :6

----

*Bottom cut Baffle Data
1. Number of Baffles :5
2. Baffle Size % of Diameter :75.00
3. Thickness of Baffles :6

----

*Top / Bottom cut Baffle Data
1. Number of Baffle :1
2. % Top cut :10.00
3. % Bottom Cut :10.00
4. Thickness of Baffles :6

----

*Top / Bottom / Center cut Baffle Data
1. Number of Baffle :1
2. % Top cut :5.00
3. % Bottom Cut :5.00
4. Horizantal % of Middle portion Vacant :50.00
5. Vertical % of Middle portion Vacant :50.00
6. Thickness of Baffles :6

==

*Tie Rods Data
1. Number of Tie Rods :4
2. Diameter of Tie Rods :14
3. Length of Tie Rods :4073

==

				Total Weight	4143.56
82	Shell Drain Nozzle Blind Flange (N6)	1	AISI 316	155(OD)19(Th)	2.69
81	Shell Drain Nozzle Nuts (N6)	8	SA 194 Gr. 2H	19(Dia)	1.83
80	Shell Drain Nozzle Stud Bolts (N6)	4	SA 193 Gr. 2H	19(Dia)88(Lg)	0.78
79	Shell Drain Nozzle Gasket (N6)	1	CAF	95(OD)48(ID)12(Th)	0.03
78	WN Flange on Shell Drain (N6)	1	AISI 316	155(OD)19(Th)	3.57
77	Shell Drain Nozzle Neck (N6)	1	AISI 316	40(OD)160(SCH)81(Lg)	0.60
76	Shell Vent Nozzle Blind Flange N5)	1	AISI 316	155(OD)19(Th)	2.69
75	Shell Vent Nozzle Nuts (N5)	8	SA 194 Gr. 2H	19(Dia)	1.83
74	Shell Vent Nozzle Stud Bolts (N5)	4	SA 193 Gr. 2H	19(Dia)88(Lg)	0.78
73	Shell Vent Nozzle Gasket (N5)	1	CAF	95(OD)48(ID)12(Th)	0.03
72	WN Flange on Shell Vent (N5)	1	AISI 316	155(OD)19(Th)	3.57
71	Shell Vent Nozzle Neck (N5)	1	AISI 316	40(OD)160(SCH)81(Lg)	0.60
70	Reinforcing Pad on Right Channel(N4)	24	AISI 316	250(OD)168(ID)6(TH)	1.32
69	Hexagonal Nuts(N4)	24	SA 194 Gr. 2H	19(Dia)	5.48
68	Stud Bolts(N4)	12	SA 193 Gr. 2H	19(Dia)120(Lg)	3.21
67	Flange on Right Channel(N4)	1	SS 304 Spiral	250(OD)168(ID)12(Th)	0.16
66	WN Flange on Right Channel(N4)	1	AISI 316	317(OD)35(Th)	31.08
65	Nozzle Neck on Right Channel(N4)	1	AISI 316	150(OD)80(SCH)47(Lg)	1.90
64	Reinforcing Pad on Right Channel(N3)	24	AISI 316	250(OD)168(ID)6(TH)	1.32
63	Hexagonal Nuts(N3)	24	SA 194 Gr. 2H	19(Dia)	5.48
62	Stud Bolts(N3)	12	SA 193 Gr. 2H	19(Dia)120(Lg)	3.21
61	Flange Gasket on Left Channel(N3)	1	SS 304 Spiral	250(OD)168(ID)12(Th)	0.16
60	WN Flange on Left Channel(N3)	1	AISI 316	317(OD)35(Th)	31.08
59	Nozzle Neck on Left Channel(N3)	1	AISI 316	150(OD)80(SCH)47(Lg)	1.90
58	Reinforcing Pad on Shell(N2)	24	AISI 316	250(OD)168(ID)6(TH)	1.32
57	Hexagonal Nuts(N2)	24	SA 194 Gr. 2H	19(Dia)	5.48
56	Stud Bolts(N2)	12	SA 193 Gr. 2H	19(Dia)120(Lg)	3.21
55	Flange Gasket on shell(N2)	1	CAF	250(OD)168(ID)12(Th)	0.16
54	WN Flange on shell(N2)	1	AISI 316	317(OD)35(Th)	31.08
53	Nozzle neck on shell(N2)	1	AISI 316	150(OD)80(SCH)47(Lg)	1.90
52	Reinforcing Pad on Shell(N1)	24	AISI 316	250(OD)168(ID)6(TH)	1.32
51	Hexagonal Nuts(N1)	24	SA 194 Gr. 2H	19(Dia)	5.48
50	Stud Bolts(N1)	12	SA 193 Gr. 2H	19(Dia)120(Lg)	3.21
49	Flange Gasket on shell(N1)	1	CAF	250(OD)168(ID)12(Th)	0.16
48	WN Flange on shell(N1)	1	AISI 316	317(OD)35(Th)	31.08
47	Nozzle neck on shell(N1)	1	AISI 316	150(OD)80(SCH)47(Lg)	1.90
46	Shell Lifting Lug	1	IS 2062 Gr.B	225(Lg)65(W)16(Th)	1.84
45	Shell Lifting Lug	1	IS 2062 Gr.B	225(Lg)65(W)16(Th)	1.84
44	Main Shell	1	AISI 316	749(OD)6(Th)4437(Lg)	506.65
43	Bellow	1	AISI 316	737(Lg)6(Th)	51.80
42	Saddle Support Pad	2	IS 2062 Gr.B	899(Lg)200(Wide)12(th)	16.94
41	Saddle Support Plate	2	IS 2062 Gr.B	568(Lg)699(Wide)12(th)	74.85
40	Saddle Support Ribs	6	IS 2062 Gr.B	347(Lg)200(Wide)12(th)	39.18
39	Saddle Support Base Plate	2	IS 2062 Gr.B	699(Lg)200(Wide)16(th)	35.13
38	Davit Plates	2	IS 2062 Gr.B	284(Lg)20(W)10(Th)	0.89
37	Davit pipe	2	SA 106 Gr. B	89(OD)89(ID)489(Lg)	19.08
36	Davit pipe	2	SA 106 Gr. B	89(OD)89(ID)680(Lg)	19.08
35	Davit pipe	2	SA 106 Gr. B	114(OD)89(ID)1080(Lg)	19.08
34	Davit pipe	4	SA 106 Gr. B	114(OD)89(ID)223(Lg)	38.16
33	Davit Plates	4	IS 2062 Gr.B	285(Lg)213(W)20(Th)	38.16
32	Davit Plates	4	IS 2062 Gr.B	385(Lg)114(W)20(Th)	27.62
31	Right Torispherical Dish	1	AISI 316	749(OD)6(Th)	31.07
30	Right Channel	1	AISI 316	749(OD)6(Th)673(Lg)	76.84
29	Right Flange Gasket	2	CAF	867(OD)749(ID)3(Th)	1.79
28	Right Channel Partition Plate	1	AISI 316	225(Lg)	14.26
27	Right Channel Partition Plate	1	AISI 316	702(Lg)	51.46
26	Right Channel Partition Plate	1	AISI 316	694(Lg)	50.75
25	Hexagonal Nuts	56	SA 194 Gr. 2H	31(Dia)	55.54
24	Stud Bolts	28	SA 193 Gr. 2H	31(Dia)279(Lg)	46.29
23	Right Girth Slip On Flange	2	AISI 316	971(OD)73(Th)	326.27
22	Right Channel Flange Lifting Lug	1	IS 2062 Gr.B	75(Lg)65(W)16(Th)	0.61
21	Left Torispherical Dish	1	AISI 316	749(OD)6(Th)	31.07
20	Left Channel	1	AISI 316	749(OD)6(Th)673(Lg)	76.84
19	Left Flange Gasket	2	CAF	867(OD)749(ID)3(Th)	1.79
18	Left Channel Partition Plate	1	AISI 316	237(Lg)	15.08
17	Left Channel Partition Plate	1	AISI 316	345(Lg)	22.73
16	Left Channel Partition Plate	1	AISI 316	353(Lg)	23.31
15	Hexagonal Nuts	56	SA 194 Gr. 2H	31(Dia)	55.54
14	Stud Bolts	28	SA 193 Gr. 2H	31(Dia)279(Lg)	46.29
13	Left Girth Slip On Flange	2	AISI 316	971(OD)73(Th)	326.27
12	Left Channel Flange Lifting Lug	1	IS 2062 Gr.B	75(Lg)65(W)16(Th)	0.61
11	Other Baffle Spacers	44	AISI 316	19(OD)2(Th)318(Lg)	10.26
10	End Baffle Spacers	4	AISI 316	19(OD)2(Th)437(Lg)	1.28
9	Tie rod nuts	8	AISI 316	14(Dia)	0.69
8	Tie rods	4	AISI 316	14(Dia)4073(Lg)	20.44
7	Tubes	450	AISI 316	19(OD)2(Th)4500(Lg)	1485.09
6	Top/Bot Cut Baffle	1	AISI 316	725(OD)6(Th)	9.92
5	Top/Bot/Mid Cut Baffle	1	AISI 316	725(OD)6(Th)	6.89
4	Top Cut Baffle	5	AISI 316	725(OD)6(Th)	44.56
3	Bottom Cut Baffle	5	AISI 316	725(OD)6(Th)	44.56
2	Right Tube sheet	1	AISI 316	867(OD)24(Th)	91.78
1	Left Tube sheet	1	AISI 316	867(OD)24(Th)	91.78
No	Description	Qty	Material	Size	Wt Kgs

0	02-07-2025		GSD	AKK	HVR
REV	DATE	DESCRIPTION	DRN	CHKD	APPD

REVISION LIST

COMPANY NAME
CITY

DRN GSD / DATE 02-07-2025	Clients: ABC ENGINEERS
CHKD AKK	Consultants: ABC CONSULTANTS
DATE 02-07-2025	End User: ABC ENGINEERS
APPD HVR / DATE 02-07-2025	Title :
SCALE 1:20.0	GENERAL ARRANGEMENT
SHEET C	

THIS DRAWING IS THE PROPERTY OF Co Name. ALL USE WITHOUT WRITTEN CONSENT IS FOREBIDDEN.

DWG. No.: he08m_cR0	SHEET 3 OF 3	REV. No. 0
PROJECT No.: PROJECT 123	EQPT No.: EQUPT 123	
TAG No.: HE-123	Company JOB No.: XYZ 001	
	CLIENT'S PO No:	

MARK	QTY	NOZZLE			FLANGE			RF PAD		NOZZLE	WELD DET		
No	No	SERVICE	SIZE	SCH	TYPE	CLASS	FACE	OD	THK	LENGTH	TYPE	A	B
N1	1	SHELL INLET	150	80	ASME B16.5	300	WNRF	250	6	150	W2	6	6
N2	1	SHELL OUTLET	150	80	ASME B16.5	300	WNRF	250	6	150	W2	6	6
N3	1	CHANNEL INLET	150	80	ASME B16.5	300	WNRF	250	6	150	W2	6	6
N4	1	CHANNEL OUTLET	150	80	ASME B16.5	300	WNRF	250	6	150	W2	6	6
N5	1	SHELL VENT + BF	40	160	ASME B16.5	300	WNRF	140	6	150	W2	6	6
N6	1	SHELL DRAIN + BF	40	160	ASME B16.5	300	WNRF	320	6	150	W2	6	6

SIZE (594 mm X 841 mm)

CAD File: he08m_cR0